XTS LIGHT / XTS

Compactness for the smallest spaces

Capacity (kg): 1500 / 2000

Lifting Height (mm): 200

POWERED PALLET TRUCKS

XTS

Maximum compactness, versatility and elegance for agile, quick and safe handling operations. The smallest device within its category, compact as a manual pallet truck, it is the best solution to get out of small spaces, where agility and compactness are the fundamental features being required.
The aforesaid features make it particularly suitable for handling operations on lorries and articulated lorries, which are characterised by very small manoeuvring spaces.
It is available in 1500 Kg (light) and 2000 Kg versions.

Features in detail:

NEW DR EVO DRIVE STEERING:

Includes LED battery charge indicator, "turtle" switch for variable speed control, precision proportional lifting / lowering control and safety reversing (crushproof) switch.

TRACTION AND STABILITY:

Structure with 5 contact points and shock-absorber system for grip by the driving wheel in case of floor irregularities. Includes motor-wheel with SEM technology and energy recovery braking system.

XTDL

Multi-functionality

Capacity (kg): 1800-1050 / 1800-700

Lifting Height (mm): 200-1400 / 200-700

POWERED PALLET TRUCKS

XTDL 1814

In addition to lifting to 200 mm from the floor like a common pallet truck, the XTDL's forks lift independently to 1400 mm. Combine traditional pallet handling operations with additional functions such as storage and picking from shelves and unloading motor vehicles. The lifting of the support legs allows simultaneous handling of two pallets and passing over ramps and other obstacles on the floor.

XTDL 1807

Version equipped with first lifting stage up to 200 mm and secondary fork lifting up to 700 mm.

Features in detail:

Handling of two pallets.

Motor Vehicle Loading and Unloading Operations.

Storage and picking of goods.

XTS LIGHT - XTS

model		XTS LIGHT 1502	XTS 2002
Q	Kg	1500	2000
C	mm	600	600
I	mm	1150 -1000 - 800	1150 - 1000 - 800
L	mm	1615	1615
X	mm	205	205
X2	mm	190	190
Y	mm	1220	1220
L2	mm	465	465
M	mm	560	560
N	mm	180	180
h1	mm	1440	1440
h3	mm	200	200
B	mm	750	750
WA	mm	1430	1430

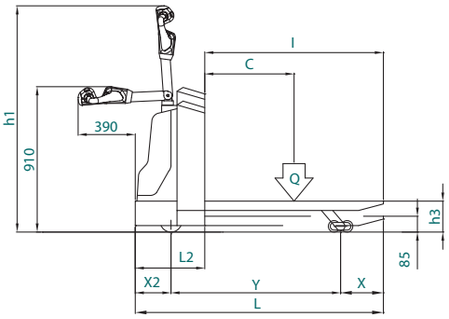

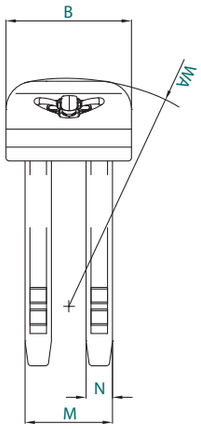

STANDARD EQUIPMENT

• Electronic battery charger 24V 20A with microprocessor • Forks control by push-buttons • Electric end stroke • Proof-seal bearings with pins with self lubricating sintered bushings • Electromagnetic parking brake • Braking in release contra flow • High-frequency electronic plant 24V with separated excitation with braking in release contra flow • Fixed forks length mm. 800-1000-1150 • Shock absorber on driving-wheel • Exhausted battery warning-indicator • Side wheels with extra-heavy castors • Tandem or single fork rollers • DR-EVO Steering • Safety components • n.2 Battery with Tubolar Plates 12V 155AH (for XTS) or 12V 110Ah (for XTS LIGHT)

XTDL 1807

model		XTDL 1807
Q1	Kg	750
Q2	Kg	1800
C	mm	600
I	mm	1150
L	mm	1755
X	mm	170
X2	mm	185
Y	mm	1400
L2	mm	605
M	mm	566
N	mm	188
h1	mm	/
h3	mm	700
B	mm	750
WA	mm	1610

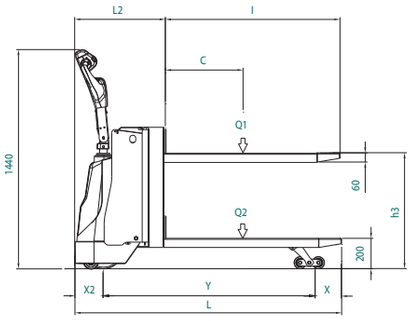

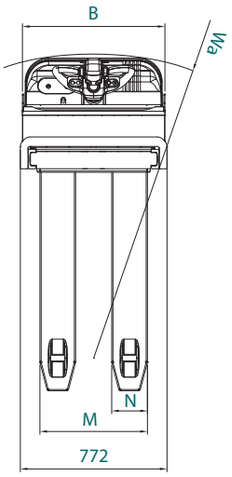

XTDL 1814

model		XTDL 1814
Q1	Kg	1050
Q2	Kg	1800
C	mm	600
I	mm	1150
L	mm	1755
X	mm	170
X2	mm	185
Y	mm	1400
L2	mm	605
M	mm	566
N	mm	188
h1	mm	1170
h3	mm	1400
h4	mm	1830
B	mm	750
WA	mm	1610

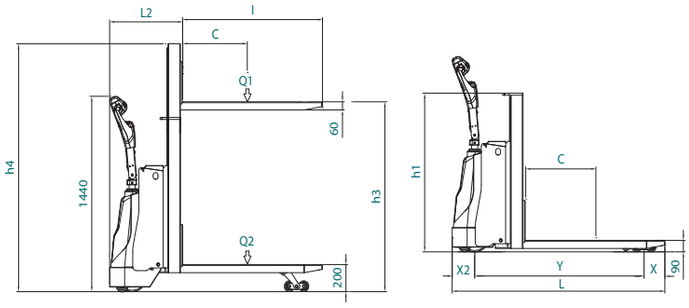

STANDARD EQUIPMENT

• Electronic battery charger 24V 20A with microprocessor • Forks control by push-buttons • Electric end stroke • Proof-seal bearings with pins with self lubricating sintered bushings • Electromagnetic parking brake • Braking in release contra flow • High-frequency electronic plant 24V with separated excitation with braking in release contra flow • Fixed forks length mm. 1150 • Shock absorber on driving-wheel • Exhausted battery warning-indicator • Side wheels with extra-heavy castors • Tandem fork rollers • DR-EVO Steering • Safety components • Traction Battery 24V 130AH MBS